Safety Alert #12-013

DEPARTMENT OF DEFENSE
HEADQUARTERS, US FORCES-AFGHANISTAN
NEW KABUL COMPOUND, KABUL, AFGHANISTAN
APO AE 09356

USFOR-A-SAFETY

Fatality

02 February 2012

Ensure widest dissemination and post on bulletin boards

A service member was fatally wounded when another service member launched a Light Anti-Tank Weapon (LAW) in his direction at point-blank range. (Three more SMs were injured by the blast)

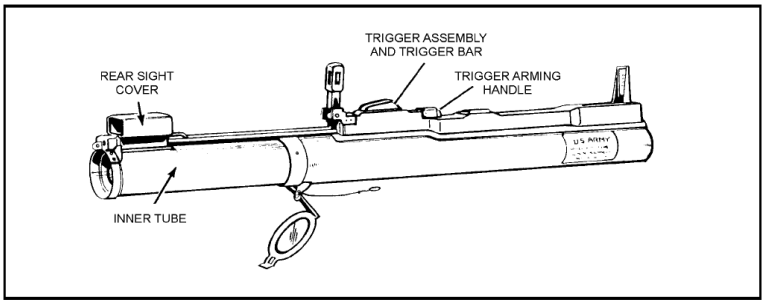

Important information to remember:

- **NEVER point the muzzle of any AE toward another soldier – live or otherwise.**
- **Inert or dummy AE should NOT be stored in magazines with live AE when other storage space is available.**
- **Dummy/inert AE should be segregated from live AE and clearly identified.**

"SAFETY IS INTEGRAL TO THE WARRIOR"

USFOR-A Safety Kabul
DSN 318-449-4830

USFOR-A Ground Safety
DSN 318-449-4829

USFOR-A Safety (S/SW)
Kandahar
DSN 318-421-7434