NOTES:
1. APPLICABLE STANDARDS
   A. ASME Y14.100
   B. ASME Y14.5
   C. AWS D1.2
2. STRAP CAN BE WRAPPED FROM AROUND TIRE FRAME TO AROUND SIDE RAIL TO SECURE PLATFORM
3. WELD LANYARD TO FRAME; OPT. DRILL AS NEEDED AND ATTACH W/ RIVET, PART NO 8
4. DRILL AS NEED AND ATTACH W/ 4 RIVETS, PART NO 8; OPT. WELD

REVISIONS					
MF	ZONE	LTR	DESCRIPTION	DATE	APPROVED
		X-	INITIAL RELEASE	20080731	
		XA	ADD DIST STATEMENT	20090826	
		XB	ADD ID PLATE	20091021	

CAD MAINTAINED. CHANGES SHALL BE INCORPORATED BY THE DESIGN ACTIVITY.

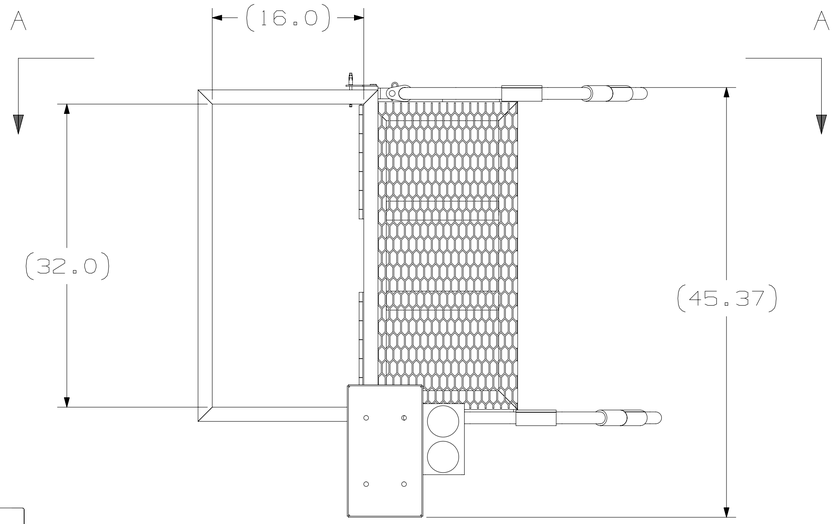

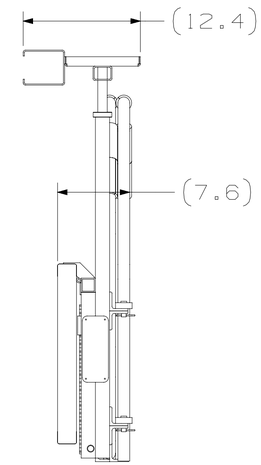

SIDE - FOLDED

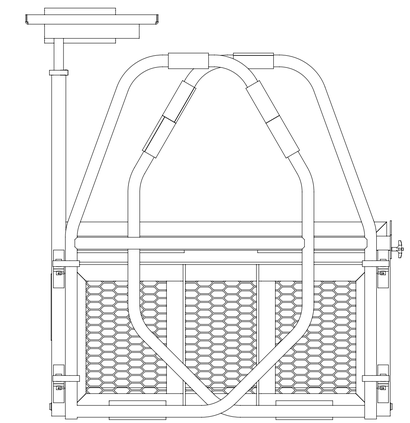

REAR - FOLDED

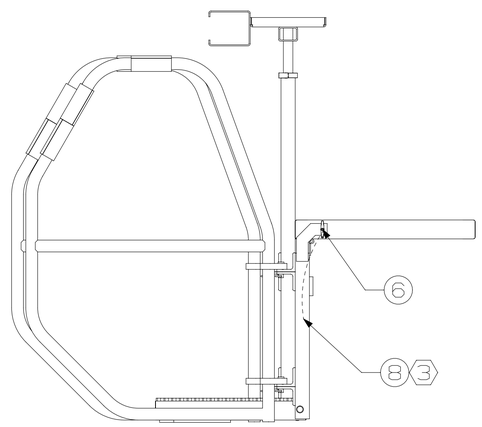

VIEW A-A

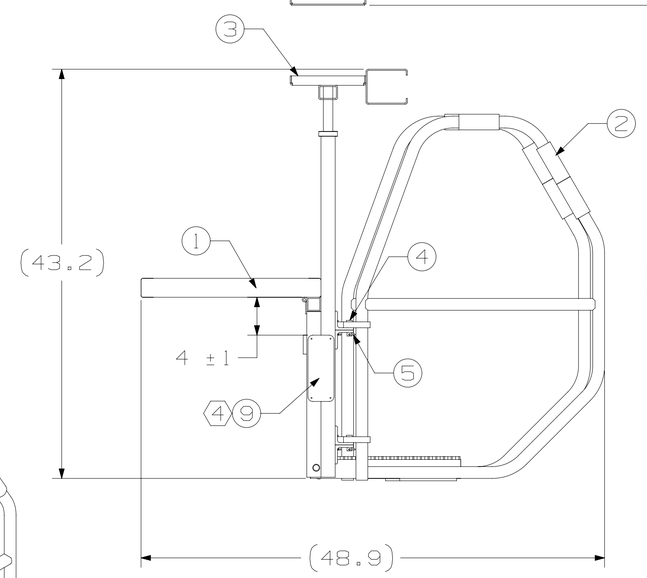

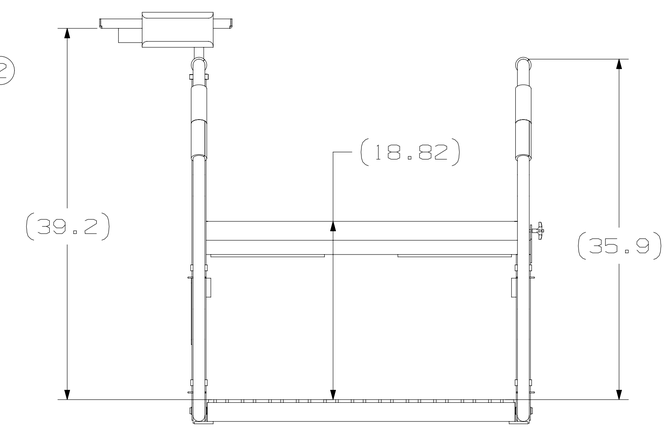

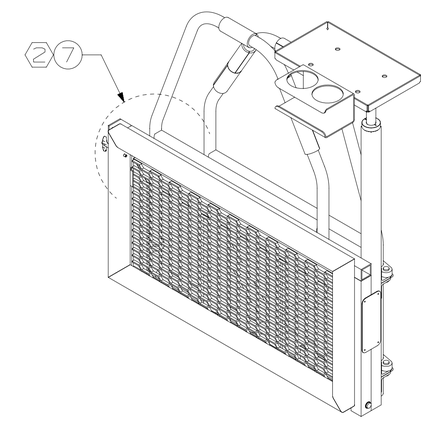

ISOMETRIC VIEW - FOLDED

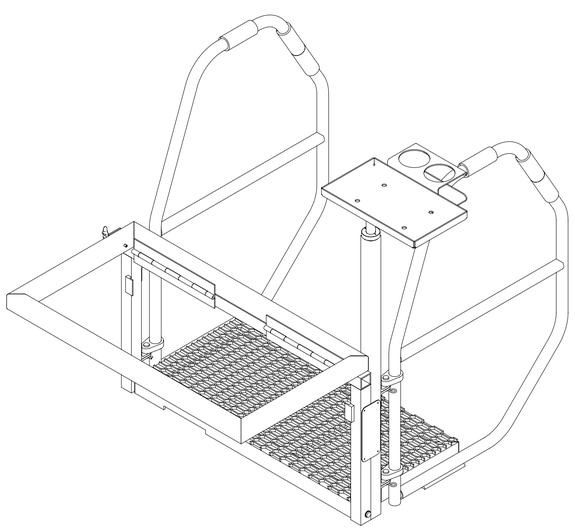

ISOMETRIC VIEW

ITEM #	PART NUMBER	PART NAME	QTY
1	RIA152407	FRAME WELDMENT	1
2	RIA152382	SIDE RAIL	2
3	RIA152388	WORK AREA ASSEMBLY	1
4	RIA152412	PIN, CLEVIS	4
5	RIA152414	PIN, COTTER HAIRPIN	4
6	RIA152415	PIN W/ T HANDLE	1
7	RIA152416	STRAP	1
8	RIA152410	RIVET	SEE NOTES 3 & 4
9	RIA152417	ID PLATE	1

INTERPRET DRAWING IN ACCORDANCE WITH STANDARDS PRESCRIBED BY MIL-STD-100

MARKING REQUIREMENTS PER MIL-STD-130

[X] DO NOT APPLY MARKING

[ ] DO APPLY:

19204-
MFR-19204

METHOD:

SIZE:

MECHANICAL PROPERTIES	
YS MIN	
YS MAX	
EL 2	
RA	
BH	
RH	

NEXT ASSY | USED ON

APPLICATION

UNLESS OTHERWISE SPECIFIED DIMENSIONS ARE IN INCHES

TOLERANCES:
ANGLES ±
3 PLACE DECIMALS ±
2 PLACE DECIMALS ±
BREAK EDGES:
FILLETS:
FINISH:

MATERIAL

FINAL PROTECTIVE FINISH

CONTRACT NO:

DATE

PREPARED		
CHECKED		
ENGINEER		

DRAWING APPROVAL

DESIGN APPROVED

U.S. ARMY / ROCK ISLAND ARSENAL
JOINT MANUFACTURING AND TECHNOLOGY CENTER
ROCK ISLAND, ILLINOIS 61299-5000

MECHANICS PLATFORM

SIZE	CAGE CODE	DRAWING NO.
D	19204	RIA152400

SCALE 1/8 | SHEET 1 OF 1

DISTRIBUTION STATEMENT A
THIS IS APPROVED FOR PUBLIC RELEASE:
DISTRIBUTION IS UNLIMITED.

RIA FORMAT 2000

D RIA152400 B