Property of U.S. Army Aviation Technical Library
Fort Rucker, AL 36362-5163

FlightFax
REPORT of ARMY AIRCRAFT ACCIDENTS
December 1995 ◆ Vol 24 ◆ No 3

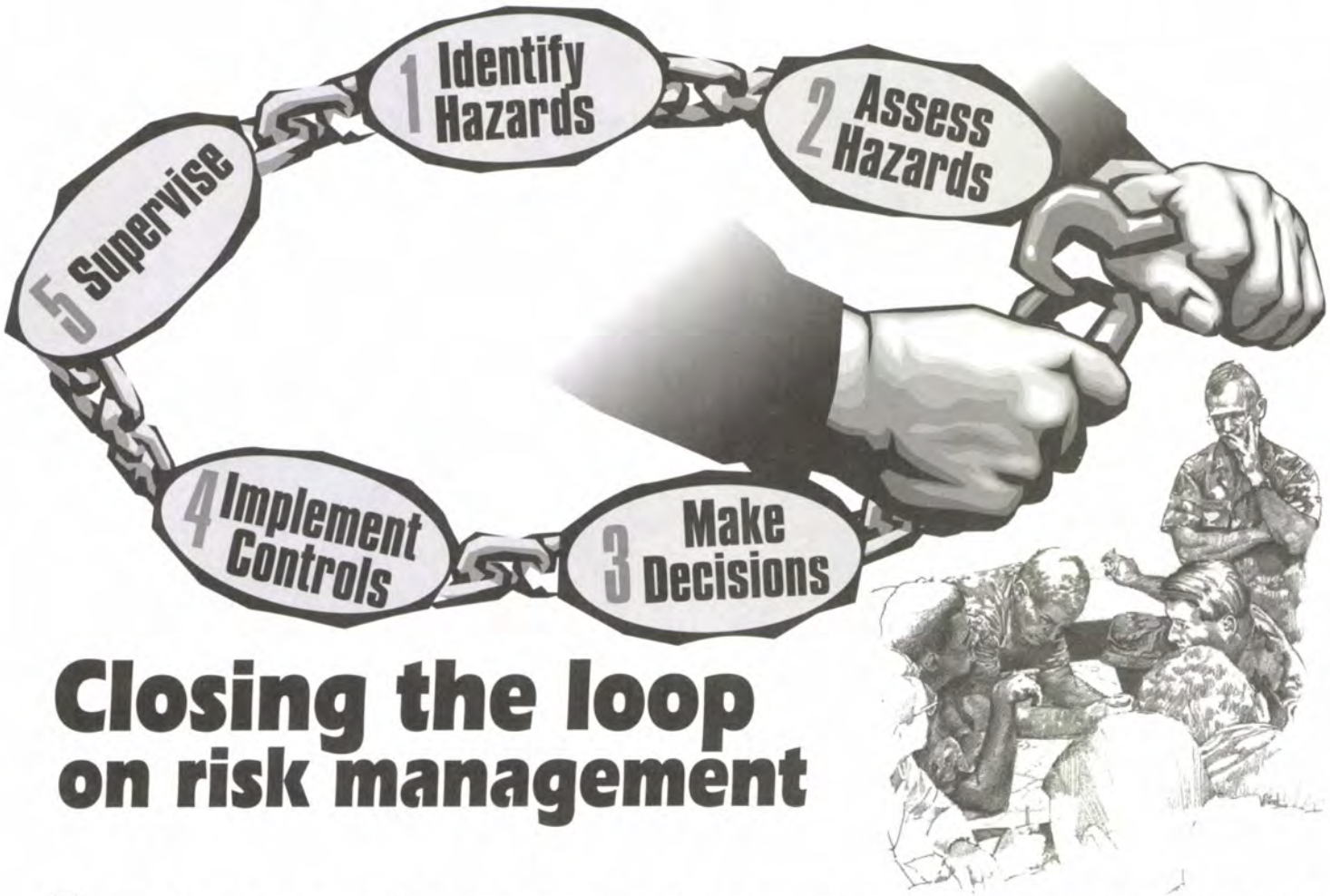

Closing the loop on risk management

As a rule, we in the aviation community do a good job of properly identifying hazards and subsequently completing a generic risk assessment. But far too often, we assess the risks and make little or no further effort to eliminate or control them. In essence, we stop managing risks as soon as the risk assessment is completed and a breakdown in the effectiveness of the risk-management process occurs.

Checking the boxes and adding up the numbers on a risk-assessment form is a useful tool, but it should not be the driver in a unit's risk-management program. For maximum effectiveness, risk management must be a closed-loop process: a cyclic five-step process that must start with planning and continue throughout execution, postoperations, and the after-action reviews.

Properly applied, risk management will allow commanders to achieve cost savings while still accomplishing their mission (see one commander's approach "Do you need to reevaluate your risk-management program" in this issue). While these cost savings include both personnel and equipment, protecting the force is always at the forefront of the Army's risk-management efforts.

Do you need to reevaluate your risk-management program?

Taking a closer look at your unit's risk-management program could help identify dysfunctional procedures and assist in achieving maximum cost savings.

As military organizations continue to transition to an austere fighting force, leadership must continually seek new and innovative methods to use shrinking resources wisely rather than reduce the number of personnel or the quality and quantity of training and equipment. Although some reductions are inevitable, implementing more effective operational methods and procedures can achieve cost savings and keep reductions to a minimum. One method is to ensure your unit's risk-management program is functioning effectively and efficiently. If it isn't, you're missing out on some potential cost savings.

Managing risks = cost savings

Risk management is a program that provides units with the potential to economize on resources by preserving personnel and equipment. Thus, one solution to enhancing force protection capabilities can be found in the accurate, thorough application of risk management during both training and combat.

Managing acceptable risk is one of the primary concerns facing the commander, staff, and subordinate leadership in conducting the unit's mission. Failure to adequately control the inherently high-risk activities associated with aviation operations in a peacetime or combat scenario has the potential to seriously degrade the unit's warfighting capability and ultimately can destroy any organization. Therefore, commanders must develop and tailor their unit's risk-management program based upon the unique aspects of the mission and capabilities of the organization. Consequently, commanders must also seek to establish a delicate balance between adequate safety margins to protect valuable and limited personnel assets and equipment while pursuing well-targeted, realistic training. The new TC 1-210: *Aircrew Training Program, Commander's Guide to Individual and Crew Standardization* assists the commander in formulating and executing a risk-management program.

My unit's situation

As the commander of an aeromedical evacuation company in the Georgia Army National Guard, I face the challenges typical of other Reserve Component organizations that seldom meet collectively to perform their mission. During a recent unit deployment where crew endurance was stretched, the need to review the unit's risk-management program became evident.

If a clear, accurate picture of the status of our risk-management program was to be obtained, it was necessary for the responses to come from the user level—a broad cross-section of the aviators themselves. Hence, I chose to use an aviation risk-management questionnaire as a method to obtain data for analysis.

The questionnaire

The questionnaire was divided into three sections. Section one contained a series of comprehensive questions on demographics to describe the population. The second section examined the respondents' risk-management training and experience level. The final section dealt with the respondents' perceptions, attitudes, and opinions about risk management.

Field testing proved invaluable to the success of the survey. As a result of the field test, I either modified or discarded several poorly worded questions, changed the instructions, and added more fixed-choice items.

Administering the survey

In a National Guard unit, the greatest number of people can best be captured during monthly multiple unit training assemblies. The dates, time, and location where the survey was to be administered were announced 1 month in advance, and a reminder was published in the monthly drill letter. The goal was to survey 100 percent of the warrant officer and commissioned officer aviators. However, during the scheduled 2-day survey period, only 75 percent of the total population were available.

I administered the survey by distributing numbered questionnaires and explaining the instructions, emphasizing anonymity and the need to accurately respond to all items. The location I used also serves as the pilots briefing room. Attendance at pilots briefings is mandatory. Thus, by administering the survey immediately following the morning pilots briefing, I was able to capture a maximum number of participants.

The results

Careful analysis of the data from the survey disclosed that

our risk-management program had room for some improvements.

Aviators felt that they properly used risk-management procedures, and the majority believed that all or most identified risks were reduced or controlled through their efforts. All of the respondents indicated that they used the risk-assessment matrix as the primary tool with which to accomplish risk management. Analysis clearly indicated, however, that several respondents had difficulty in distinguishing between risk management and a risk assessment when using some form of a risk matrix. They operated under a misperception that "the matrix is the program."

Therein lay the problem. Our aviators had been doing what they had been taught, which was how to fill out the risk matrix. While the risk-assessment matrix is a tool that can be used in the risk-management process, it is not the only method for assessing and managing risks.

The risk assessment, typically a matrix, is a required form that must be completed when filing a flight plan with unit operations before flying. If not properly used and monitored, the form can evolve into a document in which little credence is placed in the degree of risk as indicated by the risk values. Thus, the routine nature of the matrix may tend to degenerate the importance placed on the risk values it reveals.

Risk assessment does not equal risk management

The key to achieving the delicate balance needed between adequate safety margins and realistic training is risk management. The cornerstone of the risk-management program is the *five*-step process (identify the hazards, assess the risks, develop controls and make a risk decision, implement controls, and supervise) that is being taught and practiced throughout the Active Army and Reserve Components and is now the central theme in force protection.

All units are routinely required to integrate the risk-management process in the planning stages and throughout the execution of their mission. However in some cases, risk management has not been fully implemented at the user level due in part to an inadequate comprehensive understanding of how to properly use it to complement the decision-making process.

Typically, we do a good job of properly identifying the hazards and subsequently completing a generic risk assessment in the form of a matrix or some other risk analysis quick reference. But too often, once we have assessed the risk, we stop doing risk management. We make little or no further effort to eliminate or control the risks we have just assessed.

I sense that an incomplete effort to develop controls and make a risk decision at the proper level, implement controls, and follow up with appropriate supervision is a familiar scenario. And unfortunately, it is a systemic pattern in causation analysis during accident investigations.

Why do we stop short in completing the last three steps in the risk-management process? We are left to wonder if we really do understand risk management. Can our soldiers, subordinate leaders, and commanders accurately target and apply the entire process correctly? I discovered that in my unit we were thoroughly identifying known potential hazards. However, the risk-management program in our unit was not always effectively reducing or controlling all identified risks.

The survey became the catalyst for an extraordinary bottom-up approach to reeducating our unit aviators through both formal and on-the-job training on how to properly and most effectively use risk management. Additionally, we appointed a risk-management officer to be responsible for training and maintaining aviator risk-management skills. Finally, we also discovered that the risk-assessment form was repetitious, ambiguous, and no longer accurately assessed our degree of risk prior to flight. Consequently, the form was modified to achieve a more credible determination of risk. For risk management to generate cost savings, we had to learn to go beyond simple risk assessment.

Do you suspect your risk-management program is in need of repair?

You, too, can find out. There is nothing magical or complicated about developing or administering a survey. With a little effort, some planning, and coordination, you might also be able to improve your safety program.

A by-product that also tends to emerge following the administration of a survey is that it promotes a healthy discussion among crewmembers that may be even more valuable than the actual survey results. Regardless of the method you use to administer it, a survey can successfully assist the command in adjusting training to compensate for crewmember deficiencies, help in reengineering the unit risk-management program if it needs it, and ultimately enable the command to more effectively and with greater confidence safely conduct the assigned mission.

As commanders, we must first ensure that everyone is trained in and thoroughly understands the risk-management process and rules and then place greater emphasis on strictly enforcing the use of the *entire* risk-management process within our units. Doing so can help us control accidental losses, which equates to a savings in both personnel assets and equipment costs. It is clear that we must devote more attention to our established risk-management programs if we wish to achieve and maintain an exemplary safety record.

—MAJ Frederick O. Stepat, 151st Medical Company, High Capacity Air Ambulance (Provisional), Georgia Army National Guard, DSN 925-5622 (770-919-5622)

"Trapped gas"

Have you ever closed out your fuel-consumption check on a long flight and felt confident that the remaining fuel was sufficient to complete your mission—only to be surprised by the amount of fuel that was *not* in your tank when you checked it later? Or perhaps you've been on a flight that was so short you hardly paid any attention at all to fuel-management procedures and suddenly discovered that you should have!

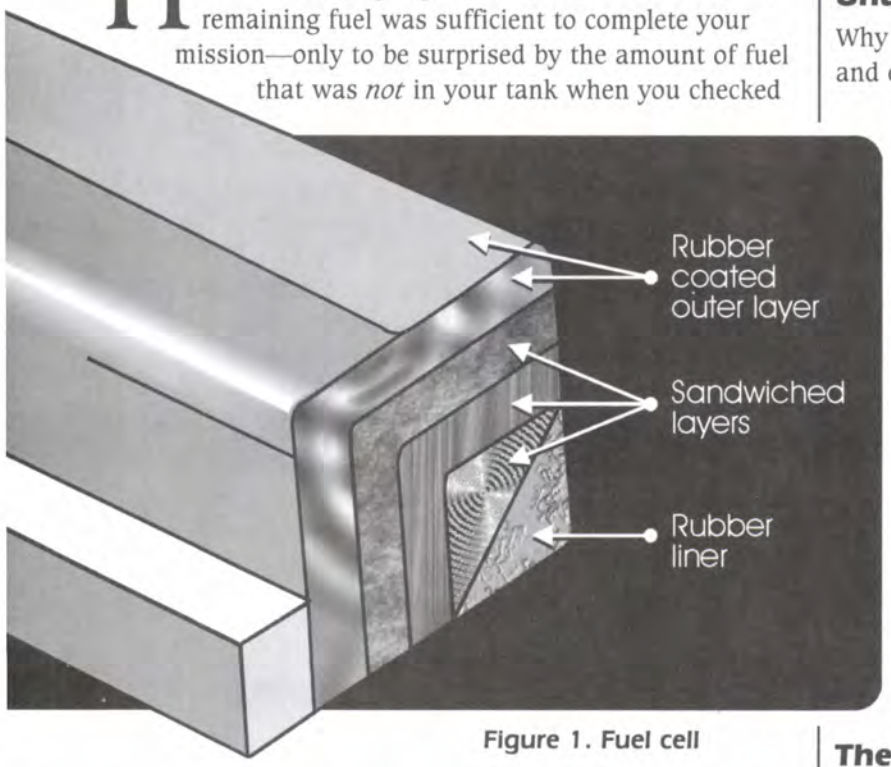

Figure 1. Fuel cell

Not enough fuel?

■ The crew of an OH-58A closed the fuel check, noted a 145-pounds-per-hour burn rate, and computed burnout and reserve times. Well before the computed reserve time, the 20-minute fuel light illuminated and was confirmed by the fuel gauge indication. The crew landed the aircraft without incident. When the aircraft was refueled, it took only 20 gallons to fill the 71.5-gallon tank.

■ The crew of an OH-58A noticed that the fuel level was suddenly at 200 pounds and turned back toward their home airfield. Ten minutes later, the gauge read 100 pounds and the 20-minute light was on. Three minutes later, they landed the aircraft with an indicated 50 pounds of fuel. The 71.5-gallon tank was refueled with only 35 gallons of fuel.

■ The crew of an OH-58C noticed their fuel consumption rate had increased significantly, aborted their mission, and headed for home base. The fuel burn rate continued to increase, and the crew landed the aircraft in mountainous terrain. The engine flamed out during shutdown due to fuel starvation. The 71.5-gallon tank was topped off with only 40 gallons of fuel.

Unusable fuel?

Why did these three aircraft experience low-fuel quantity and excessive fuel-burn-rate conditions, yet in each case landed with almost half a tank of fuel on board? The incidents are examples of one particular type of structural failure that could be catastrophic to someone who is slightly complacent about performing the simple steps of fuel management.

The fuel cell

The fuel cell in OH-58A/C helicopters is a self-sealing bladder type. Sandwiched between an outer rubber-coated composite layer and an inner rubber liner, the self-sealing bladder is constructed of several layers of strong, flexible composite type material and a gel designed to act as a sealant in case of projectile penetration (figure 1).

In each of the described incidents, further investigation revealed that the inner liner of the fuel cell had deteriorated, allowing fuel to be trapped between the layers of the fuel cell.

The fuel-quantity transmitters

The fuel-quantity transmitters (figure 2) are located toward the center of the fuel cell, and based on the depth of the fuel, they measure the amount of fuel in the tank. In each of the incidents, more than half of the fuel was contained in the walls of the fuel cell. Once the fuel level fell below the level of the defect in the walls, the gauge indications were no longer reliable and the fuel consumption rate appeared to increase.

Figure 2. Fuel-quantity transmitters

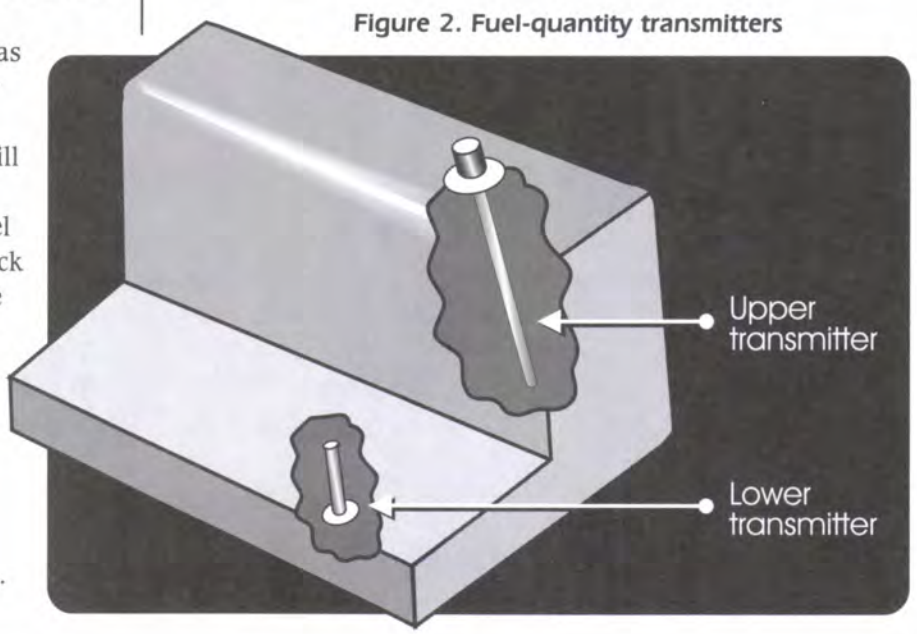

Prevention measures

All U.S. Army aircraft using crashworthy fuel cells of this type are susceptible to deterioration and the possibility of having "trapped gas."

At present, the OH-58 fuel cell interior is inspected every 24 months. Is this really adequate considering that this rubber structure could be more than 20 years old in some aircraft? DA Form 2028s suggesting that the frequency of fuel cell inspection be increased have been submitted and are currently being evaluated.

In the meantime, there are precautions that you can take to lessen the chances of finding yourself in this situation or to help you recognize what is happening before it causes you to experience a catastrophic event.

■ **Take a fuel sample.** Take a fuel sample before every flight. If there is any sign that the fuel cell is deteriorating (for example, small black flakes present in the fuel), reject the aircraft and request that the fuel cell be inspected.

■ **Practice fuel management.** Frequently monitor the fuel quantity and consumption rate. Do not get so "wrapped up" in your mission or so complacent about your "short 1-hour flight" that you get surprised by unexpected limitations! If you notice an unusual fuel consumption rate or quantity indication, land the aircraft and find out what is wrong!

POC: CW2 Tracy L. Orfield, A Company, 1-212th, Aviation Training Brigade, Fort Rucker, AL, DSN 558-4605 (334-255-4605)

Avoiding wires: one PC's suggestion

"While conducting a night, low-level deep attack, the lead aircraft in a flight of five struck 200-foot power lines." This is how the account of an AH-64 accident in the "Investigators' Forum" section of the August 1995 issue of *FlightFax* begins. This scenario involving helicopters and wires is an all-too-familiar one.

Whenever I read about this type of accident, I find myself asking, "How can aviators who have wires marked on their maps fly into wires 200 feet high?" Certainly it's possible that the navigator can get distracted, and when attention is divided, something like this can happen. But what was the person on the controls doing that prevented him or her from seeing the obstacle in time to make the necessary course correction? The costly results of these incidents leave no doubt that wires are not a contact sport. So what can we do to prevent wire strikes?

As an AH-64 PC, I know that I'm responsible for my aircraft and that it's my responsibility to do whatever it takes to protect both the crew and the aircraft I fly. Let me share a method that has helped me stay out of wires.

Using a computer program named "Rotor Nav" I construct my route planning card. I also print a "stick map" (see example) that depicts the route of flight. Using this stick map, I now have a tool that I can use to mark for reference any obstacles that may become an obstruction or a hazard in my flight path. Using a pen or pencil, I note wires, towers, nonlighted poles, and so forth. My control measures might be phase lines, reporting points, major highways, intersections, lakes, or streams.

When completed, I give a copy of my stick map to the copilot/navigator and place one on my kneeboard. Now I have quick reference points to locate where I am and to alert me to the next hazard along the route. I listen to my copilot, but I also continue to reference my stick map. This method provides me with current information without having to read a map and fly at the same time. I must say, however, that staying on the map is the best method. But when the navigator is distracted by radios or cockpit duties, it's nice to have a backup plan.

POC: CW4 Philip G. Munden, B Company, 2-101, Fort Campbell, KY, DSN 635-3970

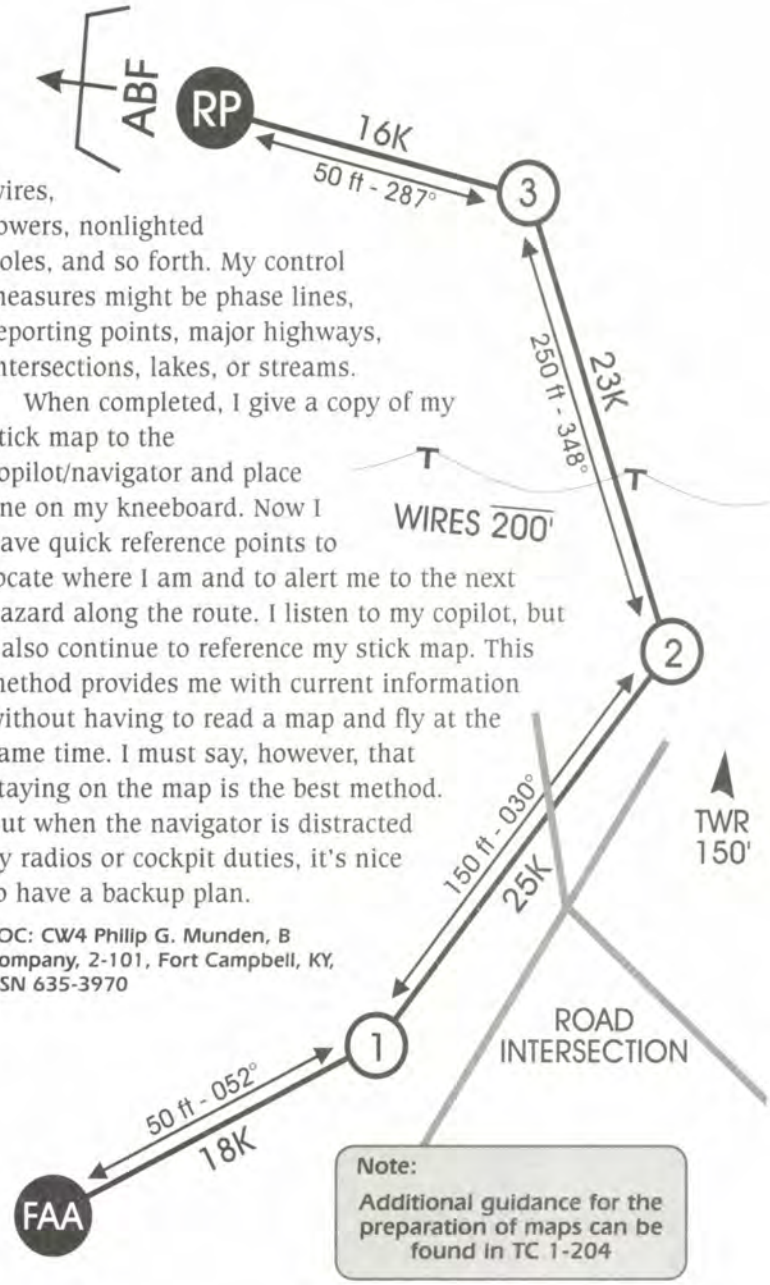

Resolving helmet-fitting problems

A pilot was recently referred to the U.S. Army Aeromedical Research Laboratory (USAARL) because his aviation life support equipment (ALSE) technician had modified his SPH-4 helmet and it no longer fit snugly. A quick assessment revealed that the helmet liner was not the correct size and that it had been *made to fit* (see figure). This modification, however well intended, did not provide for a correctly fitted helmet. The helmet easily rotated forward on the pilot's head with very little force applied to the back of the helmet.

This unauthorized modification to a helmet liner resulted in a poorly fitting helmet.

The helmet shell and liner are designed to distribute and attenuate crash forces to the head. In order for them to perform effectively, it is imperative that the helmet remain on the individual's head during a mishap sequence. An improperly fitted helmet rotates excessively, exposing the crewmember's head to impact injuries, which is the most common cause of death in helicopter accidents. There were 68 crewmember fatal head injuries in 37 aviation accidents over the past 10 years. Only through correct fitting, maintenance, and wear can the helmet perform as it was designed.

Checking the helmet for proper fit is the responsibility of the unit ALSE technician. FM 1-302: *Aviation Life Support Equipment (ALSE) for Army Aircrews* states that unauthorized modifications to the helmet are not allowed. AR 95-3: *General Provisions, Training, Standardization, and Resource Management* instructs flight surgeons to monitor the fitting of flight helmets. This system of checks is meant to ensure that the crewmember's helmet fits and functions correctly while performing normal flight duties and provides protection during a mishap.

USAARL is charged with providing Armywide technical support for individuals on flight status who have problems accommodating approved Army ALSE. Such support may involve special fitting of the flight helmet using the sling suspension assembly system, the installation of an approved universal earcup retention assembly, installation of a modified TPL™ system, or the use of other experimental and evolving technologies.

On a referral basis from ALSE technicians and flight surgeons worldwide, USAARL resolves helmet-fitting issues for approximately 50 crewmembers each year. If you or a fellow crewmember in your unit has a helmet-fitting problem that cannot be corrected locally, don't hesitate to call us.

POCs: CW5 Joel J. Voisine or Mr. Joseph R. Licina, Helmet Fitting Laboratory, USAARL, Fort Rucker, AL, DSN 558-6895/6893 (334-255-6895/6893)

INVESTIGATORS' FORUM

Lessons Learned

Written by accident investigators to provide an accident synopsis and major lessons learned from recent centralized accident investigations.

OH-58D(I). The aircraft was at a stationary out-of-ground effect (OGE) hover. While the crew was engaged in an attack on OPFOR ground targets, the aircraft drifted rearward and made contact with a tree. Tail rotor control was lost, and the PC initiated an autorotation. The aircraft struck several more trees before ground contact. The aircraft was destroyed, and the pilots received minor injuries.

• ***What happened.*** The PC actively engaged OPFOR ground targets without announcing his intentions while the PI continued to operate the mast-mounted sight. As a result, both the PC and the PI were actively engaging targets without properly monitoring the position of the aircraft to ensure obstacle clearance.

• ***Lessons learned.*** Aircraft control is the primary consideration. The complexity of the OH-58D(I) systems and missions requirements makes proper crew coordination absolutely essential to aircraft safety and mission accomplishment.

OH-58D(I). As part of an APART evaluation, the PI was conducting a simulated engine failure from 1,000 feet MSL to an authorized airfield when the engine failed. The aircraft's rotor RPM deteriorated below normal operating RPM during the "termination with power" phase of the simulated forced landing. The IP attempted to recover the aircraft at approximately 100 feet AGL with low rotor RPM. The aircraft contacted the active runway tail low, causing damage to the tail boom section and aircraft landing system.

• ***What happened.*** When the engine "flamed out" during the initiation of the maneuver, the crew did not diagnose and adequately respond to an actual engine failure. As a result, the IP allowed the PI to initiate a higher-than-normal deceleration and adjust the collective, a technique used in this OH-58D to prevent an underspeed/overtorque during the "termination with power" phase of the maneuver.

• ***Lessons learned.*** Crewmembers must remember to announce required information **and** confirm actual conditions during the initiation of a simulated engine failure. The complexity of the audio and visual warning/caution/advisory tones and messages and the aircraft's aerodynamic characteristics make crew coordination paramount to successful recovery from an emergency condition. ❑

CY 95 FlightFax index

AAAA winners for 1994—April

AAAA winners for 1994 (correction)—June

Abbreviated aviation accident report (lessons learned)—July

ABDUs—starching increases risk of burn injuries—May

Accident reduction (use the Hawthorne effect as a short-term fix to curtail an upward trend in accidents)—October

Accident reporting (new AR 385-40)—January

Accident reporting (technology arrives)—June

Address verification (because of new postal regs, *FlightFax* is updating mailing lists)—August, September, October

A dream becomes a reality (as we broke the 1.0 mark in aviation safety during FY 95)—October

AH-1 Class C accident results from unauthorized use of vehicle—December

AH-64 tail wheel locking mechanism—April

Aircraft currency requirements (STACOM 163)—January

Aircrew training manual revisions—January, June, September, November

ALSERP (understanding it)—October

Alternate airfield selection—June

Amber visors (theirs-is-better misperception)—June

AN/APX-100(V) operating procedures advisory—May

Another look at brownout/whiteout prevention—April

Another refueling fire (OH-58 destroyed when fuel nozzle separated from hose coupling)—July

Another unit's views on operations in blowing snow—September

Army Aviation Safety Professional Development Seminar—August

Army FLIP-specific DODAACs—June

Army Safety Conference FY 95 agenda—August

Ask the Judge (if you have questions about the appropriate release or use of safety information)—August

ASO corner—January, July, August, September, November

ATC—keeping the emphasis on safety—June

ATCOM maintenance advisory message on unisex couplings used on HTARS—August

ATMs (status of revisions)—January, June, September, November

Aviation battle dress uniform—June

Aviation gunnery strategy for 2.75-inch rockets—January

Aviation safety additional skill identifier—July

Aviation safety—FY 95, the best year ever—October

Aviation Safety Officer Refresher Course gets thumbs up—July

Aviation Safety Officer Refresher Course schedule—July

Aviation Safety Professional Development Seminar (recap of FY 94, plans for FY 95)—January, August

Aviation spare parts—November

Aviation tool system (NATS 95)—January

Aviation units needed to support Ranger training at Camp Merrill—July

Aviation vibration analyzer upgrades—August

Aviator cold-weather underwear (what do we order?)—May

Aviators needed for study—June

Avoiding wires (one PC's suggestion)—December

Black Hawk operators (reminder about height-velocity-avoid region)—October

Blacksnake takes a ride in a UH-1 (how to apply risk-management on a "not-so-routine" mission)—August

Blowing dust/blowing snow sample SOP—April

Blowing snow operations (another unit's views)—September

Breaking the 1.0 mark in aviation safety (new Director of Army Safety and Commander of Army Safety Center, BG Thomas J. Konitzer congratulates aviation team)—November

Broken Wing awards (recipients and synopses of emergencies for which awarded)—May, June, October, November

Brownout/whiteout prevention—April

Bulletin board link to ATCOM (maintenance data management support)—July

CCR nozzles maintenance advisory message—April

Chief of Staff of the Army, General Dennis J. Reimer's thoughts on risk management—September

Class A flight accidents (recap of FY 95)—November

Close calls and near-miss accident information needed—February

Closing the loop on risk management—November

Cold-weather underwear (what do we wear?)—May

Coming attraction (AH-64 refueling fire video in the works)—February

Congratulations AAAA winners!—April

Correction to AAAA winners—June

CY 94 *FlightFax* index—January

CY 95 *FlightFax* index—December

CY 94 STACOM index—January

CY 95 STACOM index—December

DA forms documentation—October

Delayed implementation of survival radio requirement for each crewmember—October

Delay in fielding of TC 1-210—January

Desert operations revisited: a success story (commander tells how his unit successfully developed more effective brownout/whiteout prevention techniques)—April

Director of Army Safety congratulates aviation team—November

Documentation for DA forms—October

DODAACs (Army FLIP-specific ones)—June

Don't leave home without $$$$ (reminder to soldiers coming TDY to Safety Center to bring adequate funds or government credit card)—June

Do you need to reevaluate your risk-management program?—December

Electronic bulletin board service for technical publications (information superhighway speeds technical publications updates to the field)—August

Exportable training packets (STACOM 166)—November

Finger and lip lights are on the way—May
Fire extinguishers—August
FlightFax index for CY 94—January
FlightFax index for CY 95—December
Flight helmet success stories (and reminder about proper wear, fit, and maintenance)—May
Flight helmets (resolving fitting problems—December
Flight into IMC—March
Flyer's gloves (interim solution to shortage)—August
From out of the fire! (PC's account of AH-64 refueling fire)—January
Fuel problem in OH-58s ("trapped gas")—December
FY 95—the best year ever in Army aviation safety—October
FY 95 Army Safety Conference agenda—August
Gunnery strategy for 2.75-inch rockets—January
Hawthorne effect and accident reduction—October
Height-velocity-avoid region (reminder to Black Hawk operators)—October
Helicopter external load operations—October
Helmet-fitting problems (call USAARL)—December
HIRTA (STACOM 164)—July
Human factors in Army rotary wing accidents (results of recent study)—March
IMC video now available—March
Implementation of comprehensive radiation protection program with NDTE system—May
Inadvertent IMC (instrument proficiency and confidence are keys to getting out safely)—March
Investigators' Forum (accident synopses and major lessons learned from recent centralized accident investigations)—August, September, November, December
Keeping the emphasis on safety (ATC commanders face hard choices in providing maintenance and service)—June
Lessons learned from recent centralized accident investigations—August, September, November
Logging of NVG time (STACOM 164)—July
Looking ahead through FY 95 (keeping safety on track)—January
Maintenance advisory message on CCR nozzles—April
Making safety happen (new Director of Army Safety, BG Thomas J. Konitzer's views on safety)—November
Making the right decision (How soon is "land as soon as practicable"?)—August
More on fire extinguishers—August
Moving in the right direction (great start for first quarter of FY 95)—January
NDTE system for Army aviation—May
Near-miss/close-calls information needed—February
Need good safety training material? Try a video (recap of aviation-related videos available)—February
New aviation tool system (NATS-95)—January
New NDTE system for Army aviation—May
New risk-management report (Risk Management for Brigades and Battalions) now available—March
Night vision goggle maintenance (STACOM 164)—July
OH-58 fuel problems ("trapped gas")—December
OH-58 refueling fire—July
Operations in blowing snow (another unit's views)—September
Plan smart! Fly smart! (information on pilot deviations and what information you should and should not provide to an FAA representative)—March
Plastic sunglasses: issues, answers, and solutions—May
Posters—*Remember the 5 "Cs" of IMC*—March, *Safety Has a Go-To-War Mission* and *This Cold War Isn't Over*—September
Posters are coming! (but we need your ideas and input)—March
Quality crews . . . good decisions—April
Questions about accident reporting—January
Radiation protection program (required for NDTE equipment usage)—May
Reach pendants on external slingloads—May
Read the label (applies to selecting appropriate clothing for flight duties)—June
Recap of FY 95 Class A flight accidents—November
Reevaluate your risk-management program (do you need to?)—December
Refueling fire (nozzles separated from hose coupling; OH-58 destroyed in fire)—July
Releasing or using safety information (if you have questions, ask the judge)—August
Remember the 5 "Cs" of IMC (poster)—March
Request for current addresses and status of ATMs—September
Requests for articles, poster ideas—September
Requirements for use of reach pendants on external slingloads—May
Resolving helmet-fitting problems (call USAARL)—December
Risk management (closing the loop)—December
Risk Management for Brigades and Battalions report now available—March
Risk management (key to safe winter operations)—September
Risk management—new Chief of Staff of the Army, General Dennis J. Reimer's thoughts—September
Risk-management program (do you need to reevaluate yours?)—December
Risk management (what the crews did in two scenarios and deciding how you would apply the principles of risk management)—July
Rotary wing accidents (human factors)—March
Safe winter operations (key is risk management)—September
Safety has a go-to-war mission (poster)—September
Safety-of-use message requires removal from service of refueling nozzles and nozzle assemblies with potentially incompatible couplings—July
Safety professional development seminar for aviators—January, August
Safety training videos (recap of aviation-related videos available)—February
Sample blowing dust/blowing snow SOP—April
Selecting an alternate airfield—June
Selecting appropriate clothing for flight duties requires reading labels—June

Spare parts (investigation of aviation spare parts by ATCOM)—November

STACOM index for CY 94—January

STACOM index for CY 95—December

STACOMs—January, July, October, November

STACOM 163 (aircraft currency requirements message)—January

STACOM 164 (night vision goggle maintenance, logging of NVG time, and HIRTA)—July

STACOM 165 (unauthorized practice of selecting 2000-series ATM tasks, modifying task condition, and redesignating them as 3000-series tasks)—October

STACOM 166 (exportable training packets)—November

Standardized enlisted safety meetings—September

Starching ABDUs increases risk of burn injuries—May

Supplemental cockpit lighting (finger and lip lights)—May

Survival radio requirement for each crewmember delayed—October

Status of ATMs—January, June, September, November

Sunglasses: issues, answers, and solutions about plastic ones—May

TC 1-210 (delay in fielding; update and changes)—January, November

Technical publications update—August, October

Technology arrives for accident reporting—June

Telephone area code change—January

The 5 Cs of IMC (poster)—March

The facts are. . . (*FlightFax* needs your help with articles, poster ideas)—September

The unit "Safety Bulletin"—July

There's a *what* in the cockpit? (routine flight wasn't routine after crew discovered a blacksnake in the cockpit)—August

This cold war isn't over—winterize yourself and your aircraft (poster)—September

Tips on being an effective ASO—November

"Trapped gas" (OH-58 fuel problems)—December

Understanding ALSERP—October

Unexpected and sudden (igniting fuel is a heart-stopping sound)—July

Unisex couplings used on HTARS (ATCOM maintenance advisory message)—August

Unit "Safety Bulletin"—July

U.S. Army FLIP-specific DODAACs—June

Video on IMC available—March

Videos—good safety training material (recap of aviation-related videos available)—February

Visors (stay with Army-issue and be safe)—June

What would you do? (two scenarios: what the crew did, what would you do using risk management techniques)—July

Winter operations (key to being safe is managing risks)—September

Wires (one PC's suggestions on how to avoid them)—December

You're on fire! Get out, get out, get out (account of an AH-64 refueling fire)—February

Aviation safety action messages

General

- Revision to updated information on night vision goggles—January
- Procedural change for all Army aircraft when aircraft is transferred between activities—February

Utility

- H-60 reduction of torque of self-retaining pivot bolts—January
- EH/UH/MH-60A/L change in retirement life for servo beam rails—February
- UH-1 one-time inspection of cartridge-type fuel boost pump—March
- AH-64A/D, OH-58D, AH-1S/P/E/F, A/MH-6, and MH-60 Hydra rocket motor suspension and information—April, July
- UH-1H/V and AH-1F aircraft with MWO 1-1520-236-50-30 and MWO 1-1520-242-50-2 oil debris detection system (ODDS) applied—June
- UH-1 and AH-1 maintenance procedures for aircraft equipped with oil debris detection system and using Army oil analysis program sampling—July
- UH-1H/V inspection of bipod mount assembly—August
- UH-1H/V inspection of stabilizer bar pivot bolt—August
- UH-60 one-time inspection for cracked main transmission beams, upper deck skin cracks, frame cracks, and implementation of a 100-hour recurring inspection—August
- UH-60 revised replacement criteria for troop/gunner seat attenuation wires and explicit shimming procedures for attenuation rollers—August
- UH-60 gas generator turbine rotor blade information—November
- UH-60 with improved flight controls installed replacement of 70400-08159 series bolts—November

Attack

- AH-64A/D, OH-58D, AH-1S/P/E/F, A/MH-6, and MH-60 Hydra rocket motor suspension and information—April, July
- AH-64 main rotor stretched strap assembly Teflon removal and borescope inspection—April
- AH-1F and UH-1H/V aircraft with MWO 1-1520-236-50-30 and MWO 1-1520-242-50-2 oil debris detection system (ODDS) applied—June
- AH-1E/F modified by MWO 55-1520-236-50-12 one-time removal of engine oil return line clamp—June
- AH-1 and UH-1 maintenance procedures for aircraft equipped with oil debris detection system and using Army oil analysis program sampling—July
- AH-64 procedure to inspect/replace three stop check valves in the fire extinguishing system—July
- AH-1s modified in accordance with MWO 55-1520-244-50-9: Inspection Criteria for Main Rotor Pitch Change Link Rod End Bearings, Including Manual Changes—August
- AH-64 faulty fire pull handle assembly switches on specific aircraft—August
- AH-64 inspection of main landing gear—September
- AH-64 verification of solid pins in shear pin activated decoupler (SPADs) and servocylinder installation—November
- AH-64 with T700-GE-700 and T700-GE-701 engines gas generator turbine rotor blade information—November
- AH-64 inspection of hose assembly, hydraulic primary

system for chafing, P/N 7-311830102-5, on hose clamp, P/N HS4501SS09NB—November

Cargo

- CH-47D, MH-47D, and MH-47E one-time and recurring daily inspection of thrust idler assembly—January
- CH-47D, MH-47D, and MH-47E one-time torque verification of the nuts securing the No. 1 and No. 2 power transfer unit motor/pump—February
- CH-47D, MH-47D, and MH-47E aircraft with engine transmissions utilizing Speco-manufactured gears—March
- CH-47D, MH-47D, and MH-47E one-time inspection for Stratopower pumps, NSN 1650-01-249-4341, and reporting for turnaround program—May
- CH-47D, MH-47D, and MH-47E inspection and lubrication of flight control rod end bearings—July
- CH-47D, MH-47D, and MH-47E revision to inspection and lubrication of the flight control rod end bearings—October
- CH-47D, MH-47D, and MH-47E inspection of aft vertical shaft—November
- CH-47, MH-47D, and MH-47E replacement of aft landing gear drag link assemblies susceptible to stress corrosion cracking—December

Observation

- OH-58D one-time inspection of directional control tubes—February
- OH-58D one-time inspection of pilot's seat web cover and copilot's seat cover assembly—March
- OH-58 one-time inspection of wire bundle and restack of Adel clamps near bus bar—April
- OH-58D, AH-64A/D, AH-1S/P/E/F, A/MH-6, and MH-60 Hydra rocket motor suspension and information—April, July
- OH-58A/C increase to engine oil change interval—June
- OH-58A/C inspection of bolt, shear, NSN 5306-00-944-7540, used in pylon installation—July
- OH-58D main rotor expandable blade bolt—September
- OH-58D training maneuver restriction—November
- OH-58A/C inspection of door hinges—November
- OH-58D power-off maneuver restriction—December

Fixed wing

- C-12F3 and C-12R windshield anti-ice operating instructions—July
- C-12F3 and C-12R flight limitations in icing conditions—July

Safety-of-flight messages

Utility

- UH-60A/L change to retirement life for certain main rotor blade cuffs—April
- UH/EH/MH-60 change in retirement life of forward bellcrank support assembly—November

Attack

- AH-64 tail rotor head assembly installation inspection—August
- AH-1 one-time inspection of lift link assembly—November
- AH-64A/D firing restriction for 2.75-inch FFARs—November
- AH-1 inspection of tail rotor hub assembly—December
- AH-1 one-time inspection of lift link assembly—December

Cargo

- CH-47D, MH-47D, and MH-47E one-time visual inspection of upper boost actuator serial numbers—January
- CH-47D, MH-47D, and MH-47E one-time visual inspection and torque check of lower drive link to the swashplate retaining hardware—June

Observation

- OH-58D one-time and recurring visual inspection of the tail boom and related restriction on forward indicated airspeed—March
- OH-58 revision to visual inspections of tail booms—May

Safety-of-use message

General

- Prohibited use of Breeze rescue hoists on U.S. Army helicopters—December

Aviation maintenance information messages

Utility

- EH/UH-60A and UH-60L aircraft—September
- UH-1 revised message on hydraulic servocylinder purging procedures—November

Attack

- AH-64 deactivation of rotor (blades) de-ice capability—September

Observation

- OH-58A/C inspection of force gradient assembly in the cyclic controls—September
- OH-58 mast torque signal conditioner setting—November
- OH-58 main rotor speed setting—November

CY 95 STACOM Index

STACOM 163, January

- Currency requirements

STACOM 164, July

- Night vision goggle maintenance
- Logging of NVG time
- HIRTA

STACOM 165, October

- Unauthorized practice of selecting 2000-series ATM tasks, modifying task condition, and redesignating them as 3000-series tasks

STACOM 166, November

- Exportable training packets

Accident briefs

Information based on *preliminary* reports of aircraft accidents

Aviation flight accidents

Utility

UH-60 Class C

A series - While in cruise flight during medevac IFR mission, crew experienced low rotor RPM due to dual-engine rollback. Crew executed forced landing to interstate. On final approach, opposing vehicular traffic noted aircraft was experiencing difficulty and halted to allow landing on roadway. On short final, aircraft underflew high-tension wires and touched down on road surface. Aircraft sustained damage to landing gear and belly.

V series - No. 1 generator and master caution lights illuminated during takeoff. Crew landed aircraft without further incident. Detecting electrical burning odor, crew completed emergency shutdown. Postflight inspection revealed that wire bundle had shorted out. Suspected damage to No. 1 generator and ECU.

UH-60 Class E

A series - During troubleshooting procedures for abnormal engine Np indications, mechanic disconnected two fuel lines from engine hydromechanical unit. Mechanic failed to reconnect or document disconnection of fuel lines. Unaware that fuel lines had been disconnected, MP attempted to start engine. Maintenance personnel observed fuel leaking from engine compartment. Aircraft secured without further incident.

Attack

AH-1 Class E

F series - During maintenance test flight, aircraft was descending from 10,000 feet when engine oil bypass light illuminated. Crew initiated autorotation procedures, reapplied power at 1,500 feet, and landed aircraft without further incident. Maintenance inspection revealed that 90-degree oil supply fitting had cracked. Engine had lost 7 quarts of oil.

AH-64 Class C

A series - On final approach to FARP, aircraft struck large bird and sustained damage to left wing and one main rotor blade.

A series - During readiness level progression training, aircraft tail rotor impacted windmill.

Cargo

CH-47 Class E

D series - After setting external load (HMMWV) on ground during NVG flight, aircraft drifted forward before load was released. Load was pulled on its side and sustained damage. No damage to aircraft.

Observation

OH-58 Class B

D series - As part of APART evaluation, PI was conducting simulated engine failure from 1,000 feet MSL to authorized airfield when engine failed. Aircraft rotor RPM deteriorated below normal operating RPM during the "termination with power" phase of simulated forced landing. IP attempted to recover aircraft at approximately 100 feet AGL with low rotor RPM. Aircraft landed hard and sustained damage to landing system, undercarriage, and tail boom section. No injuries. (See OH-58D(I) writeup in "Investigators' Forum.")

OH-58 Class C

A series - During standard autorotation, aircraft touched down hard.

A series - While executing low-level autorotation during transition training checkride, aircraft touched down on toes of skids and rocked rearward. Inspection revealed wrinkle damage to tail boom and scarring of drag pin fitting.

C series - Postflight inspection revealed damage to main rotor blades. Suspected tree strike.

Training

TH-67 Class C

A series - On ground contact during standard autorotation, aircraft experienced spike knock and subsequent pylon whirl. Inspection revealed damage to isolation mount, strike plate, and aft transmission cowling.

Aviation flight-related accident

Cargo

CH-47 Class C

D series - While conducting external NVG slingload operations, aircraft set M998 down on LZ. When slings were released, vehicle rolled into ravine. M998 brake was not set as required. No injuries; no aircraft damage.

Aviation-ground accident

OH-58 Class C

C series - PC was conducting engine runup for MOC following engine flush. During engine start, turbine output temperature (TOT) reached 1,000°F.

Safety messages

Aviation safety-of-flight messages

■ Safety-of-flight technical message concerning inspection of tail rotor hub assembly on all AH-1 series aircraft (AH-1-96-02, 132129Z Nov 95). Summary: An inspection conducted on a tail rotor hub assembly manufactured by Space Craft Incorporated (Cage OB3S3 was dimensionally out of tolerance. The purpose of this message is to require units to conduct a one-time inspection of tail rotor hub assemblies to find and remove any suspect assemblies. Contact: Mr. Lyell Myers, DSN 693-2438 (314-263-2438).

■ Safety-of-flight technical message concerning one-time inspection of the lift link assembly on all AH-1 series aircraft (AH-1-96-03, 141520Z Nov 95). Summary: As a result of SOF message AH-1-96-01, additional serial numbers of serviceable lift links and information on identifying serviceable lift links were discovered. This message provides that information and supersedes SOF AH-1-96-01. The purpose of this message is to furnish additional lift link serial numbers and to require units to conduct a one-time inspection of the lift link assembly to find and remove any suspect parts. Contact: Mr. Lyell Myers, DSN 693-2438 (314-263-2438).

Aviation safety action messages

■ Aviation safety action maintenance mandatory message concerning replacement of aft landing gear drag link assemblies that are susceptible to stress-corrosion cracking on all CH-47D, MH-47D, and MH-47E aircraft (CH-47-96-ASAM-01, 061726Z Nov 95). Summary: Several instances have been reported of failed aft

landing gear drag links. The investigation revealed the cause to be stress corrosion cracking (SCC). The crack originated inside the bore where the link mates with the large pin attached to the aircraft frame. The crack continued to propagate until the link failed by overload. In some cases, the link failed with the aircraft sitting on the ground. The crack originated inside the assembly and was not externally visible until the link had completely failed. SCC can occur in aluminum alloys with certain combinations of section thickness, temper, tensile stresses, and environment. The new drag links, P/N 114L2323-5, are manufactured from aluminum alloys that are resistant to SCC. The link assembly, P/N 114L2329-2, includes the drag link, P/N 114L2323-5, and sleeve bushings, P/N 114L2357-1. A team from Corpus Christi Army Depot (CCAD) has traveled to all the Chinook units and inspected the two aft drag links. The inspection consisted of a conductivity measurement of the aluminum link. The measurements will separate susceptible links and those that are resistant to SCC. The links that could fail from SCC were painted/marked with a 1½-inch-high number "3." The links that are resistant to SCC were identified with the number "5." The purpose of this message is to require units to inspect the aft landing gear drag link for the number marked by CCAD within 60 days and replace the "3" configuration with a "5" configuration within 24 months from the date of this message. Contact: Mr. Brad Meyer, DSN 693-2085 (314-263-2085).

■ Aviation safety action operational message concerning power-off maneuver restriction on all OH-58D aircraft (OH-58-96-ASAM-02, 081426Z Nov 95). Summary: During a recent OH-58D Kiowa Warrior training flight, a simulated forced landing was initiated on approach for landing. Normal autorotational procedures were initiated. At the power recovery transition prior to touchdown, the engine failed to respond and the aircraft impacted the ground and sustained significant damage. The purpose of this message is to impose restrictions on performing simulated engine failures at altitude until the complete circumstances of the above accident are identified. Contact: Mr. Brad Meyer, DSN 693-2085 (314-263-2085).

Safety-of-use message

■ Safety-of-use operational/technical message concerning prohibited use of Breeze hoists (BL-8300 series) on U.S. Army helicopters (SOUM-ATCOM-96-002, 071250Z Nov 95). Summary: The Breeze internal rescue hoist, BL-8300 series, has been restricted from use in Army helicopters. Recently there have been over 20 of the Breeze internal hoists sold in property disposal auctions. These hoists are being offered as serviceable by salvage dealers. Since there is a shortage of rescue hoists in the field, units may have or may in the future inadvertently procure the restricted hoist from salvage dealers. The purpose of this message is to alert UH-1 and UH-60 aircraft users that the restriction against the use of the Breeze Eastern internal rescue hoist has not been rescinded and to prohibit the use of Breeze Eastern internal rescue hoists (BL-8300 series). Contact: Mr. Brad Meyer, DSN 693-2085 (314-263-2085).

For more information on selected accident briefs, call DSN 558-2119 (334-255-2119).

It takes more than tanks and guns and planes to win. It takes more than masses of men. It takes more than heroism, more than self-sacrifice, more than leadership. Modern war requires trained minds. The days of unthinking masses of manpower are over. Individual intelligence, individual understanding, and individual initiative in all ranks will be powerful weapons in our ultimate success.

—General Brehon Somervell
Public Addresses, 1941-1942

In this issue:

- Closing the loop on risk management
- Do you need to reevaluate your risk-management program?
- "Trapped gas"
- Avoiding wires: one PC's suggestion
- Resolving helmet-fitting problems
- Investigators' Forum
- CY 95 *FlightFax* index
- CY 95 STACOM index

Class A Accidents through November

		Class A Flight Accidents		Army Military Fatalities	
		95	96	95	96
1ST QTR	October	0	1	0	0
	November	0	0	0	0
	December	1		0	
2D QTR	January	1		1	
	February	0		0	
	March	1		0	
3D QTR	April	1		5	
	May	2		2	
	June	1		0	
4TH QTR	July	0		0	
	August	2		5	
	September	1		0	
	TOTAL	10	1	13	0

U.S. ARMY SAFETY CENTER

Report of Army aircraft accidents published by the U.S. Army Safety Center, Fort Rucker, AL 36362-5363. Information is for accident prevention purposes only. Specifically prohibited for use for punitive purposes or matters
Addres
558-37
questic
2062 (
for Flig
Ms. Ja

Thoma
Brigad
Comm
U.S. A

*U.S. Government Printing Office: 1995 - 733-080/40003